Mechanical Performance:<机械性能>

.spring force: 50g±20g at0.60mm working stroke
<单针弹力：在工作行程0.60mm 弹力50g±20g>
.Machanical Life : 100,000 cycles
<机械寿命：100,000次>

Electrical Performance:<电气性能>

.Rated current & voltage: DC12V; 1A
<额定电压&电流：DC12V; 1A >
.Contact resistance: 50 milliohm Max.
<接触阻抗：50毫欧最大 >
.When the current is greater than 1A then need to increase the time delay circuit(3 second)
<当电流大于1A时，则需要增加延时电路(3秒)>

Environment performance:<环境性能>

.Operating Temp:-40 to +105℃
<工作温度范围：-40 to +105℃>
.Resistance to Solder heat: 260℃±5° 20s±2s
<焊锡耐热性：260℃±5° 20s±2s>
.Salt spray:48h
<盐雾测试48小时>
.RoHS compliant product
<符合RoHS产品>

To ensure the best usage, please operate it based on the working height.
为确保最佳使用，请根据工作高度进行操作。
Based on the engineering drawings, shall not exceed the maximum allowed compression
根据工程图纸，不应超过允许的最大压缩量。

Customer Signature

东莞市川富电子有限公司
DONGGUAN CFE ELECTRONIC CO.,LTD
文件受控章
DOCUMENT CONTROLLED

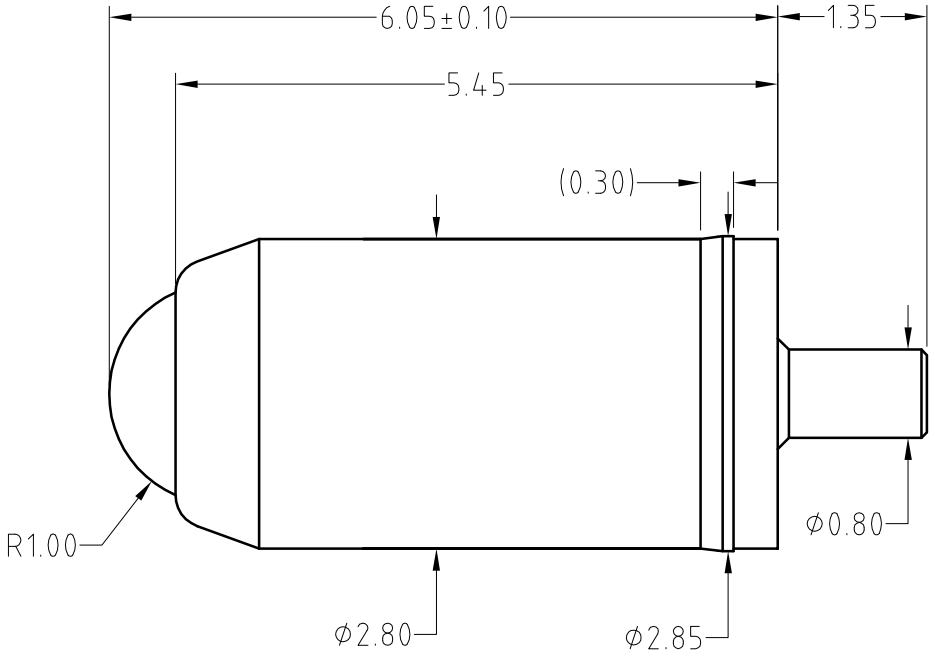

Spring:SUS304 Au <弹簧：不锈钢304 表面镀金>	B106-S1001	1
Plunger:Brass C3604 1.25um Au over 1.25~2.5um Ni <针轴：黄铜C3604 底层镀镍1.25~2.5um 表面镀金1.25um>	B106-E1050	1
Barrel:Brass C3604 0.125um Au over 1.25~2.5um Ni <针管：黄铜C3604 底层镀镍1.25~2.5um 表面镀金0.125um>	B106-B5005	1
<Specification>	<P/N>	<Qty>

ECN(DCN) NO.	REV	Date 日期	Description 描述
	A1	2017.08.10	Revise the part number of spring 修改弹簧料号
———————	A0	2017.06.27	New Release 新发行

SCALE	10:1	UNIT:mm	THIS DOCUMENT IS THE SOLE PROPERTY OF CFE CORPORATION CO.,LTD., AND SHOULD NOT BE USED IN WHOLE OR IN PART WITHOUT PRIOR WRITTEN PERMISSION.	
ANGEL	±2°	A4		
0~6	±0.05		SHEET: 1 of 1	
6~30	±0.10	DRAW	Laura	
30~150	±0.15	CHECK	Michael	
GENERAL TOLERANCE UNLESS OTHERWISE NOTED		APPRO	Simon	

CFE® 弹簧针磁吸连接器解决方案商
Pogo Pin Magnetic Connector Solutions

PART NO.	BP10651
FILE NAME	BP106XX
TITLE.	Pogo pin/弹簧针