Mechanical Performances:<机械性能>
.spring force: 70g±20g at 1.0mm working stroke
<单针弹力：在工作行程1.0mm 弹力70g±20g>
.Max stroke: 1.4mm
<最大行程;1.4mm>
.Machanical Life : 50,000 cycles
<机械寿命：50,000次>

Electrical Performances:<电气性能>
.Rated current & voltage: DC12V; 2A Max.
<额定电压&电流：DC12V; 2A Max>
.Contact resistance: 50 milliohm Max.
<接触电阻：50毫欧最大 >
.When the current is more than 1A, then need to add the delay circuit(3 second)to it.
<当电流大于1A时，则需要增加延时电路(3秒)>

Environment performances:<环境性能>
.Operating Temp:-40 to +105℃
<工作温度范围：-40 to +105℃>
.Resistance to Solder heat: 260℃±5° 20s±2s
<焊锡耐热性：260℃±5° 20s±2s>
.Salt spray:48h
<盐雾测试48小时>
.Critical dimension:★
<重点尺寸：★>
.RoHS, HF compliant product
<符合RoHS, HF 产品>

To ensure the best usage, please operate it based on the working height.
为确保最佳使用，请根据工作高度进行操作。
Based on the engineering drawings, shall not exceed the maximum allowed compression
根据工程图纸，不应超过允许的最大压缩量。.

Customer Signature

东莞市川富电子有限公司
DONGGUAN CFE ELECTRONIC CO.,LTD
文件受控章
DOCUMENT CONTROLLED

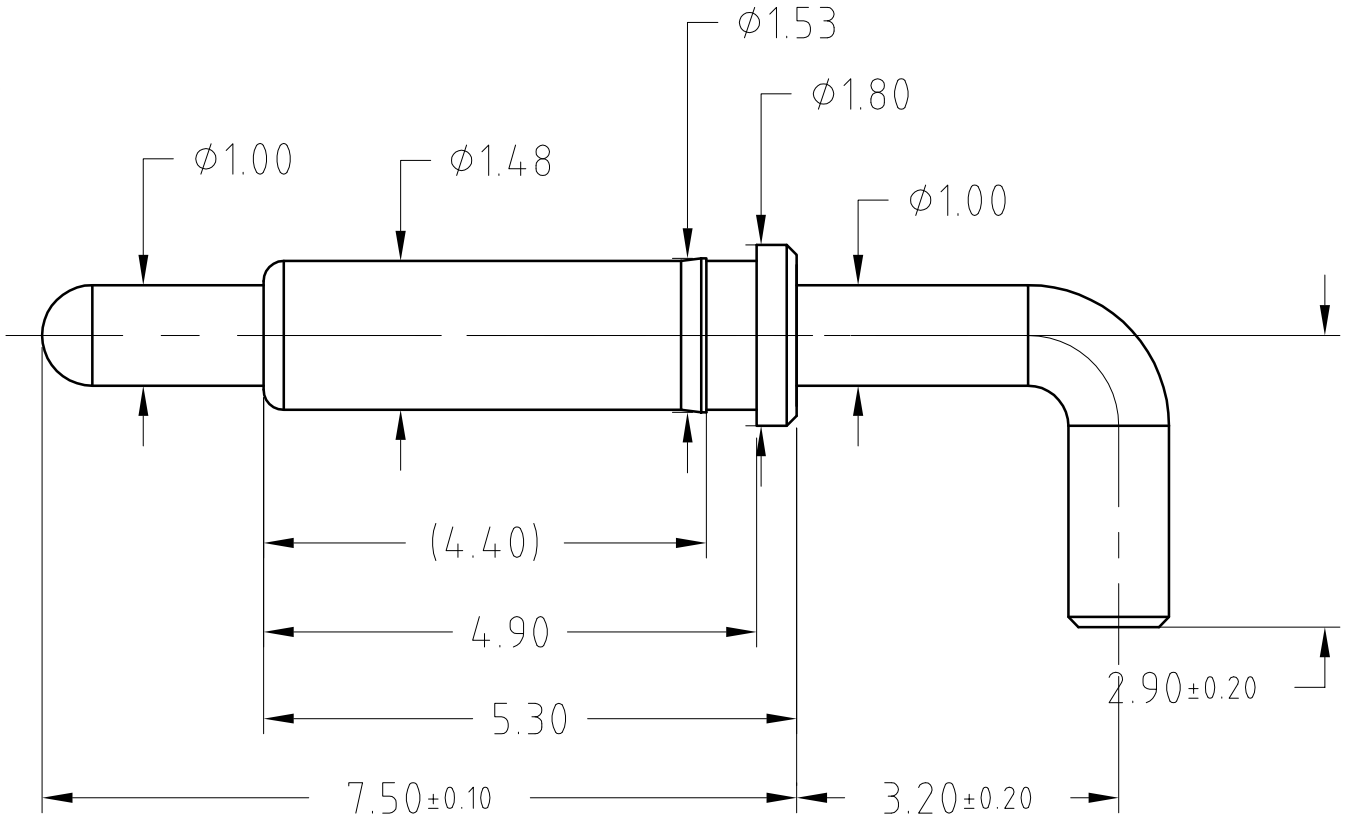

Spring:SUS304 Au <弹簧：不锈钢304 表面镀金>	M300-S1001	1
Plunger:Brass 0.5um Au over Ni <针轴：黄铜 底层镀镍 表面镀金0.5um>	B200-P3020	1
Barrel:Brass 0.5um Au over Ni <针管：黄铜 底层镀镍 表面镀金0.5um>	B483-B1020	1
<Specification> 规格	<P/N>料号	<Qty>数量

A0	2017.06.19	New Release 新发行
REV	Date日期	Description描述

SCALE	10:1	UNIT:mm	THIS DOCUMENT IS THE SOLE PROPERTY OF CFE CORPORATION CO.,LTD., AND SHOULD NOT BE USED IN WHOLE OR IN PART WITHOUT PRIOR WRITTEN PERMISSION.		
ANGEL	±2°	A4			
0~6	±0.05		SHEET: 1 of 1		
6~30	±0.10	DRAW	Julia		
30~150	±0.15	CHECK	Micheal		
GENERAL TOLERANCE UNLESS OTHERWISE NOTED		APPRO	Simon		

CFE® 弹簧针磁吸连接器解决方案商
Pogo Pin Magnetic Connector Solutions

PART NO.	BP48311
FILE NAME	BP483XX
TITLE.	Pogo pin/弹簧针