HSF	禁止使用1级环境管理物质

Note:

1.Mechanical demands
- .Contact force: 110g±20% at 1.20mm working stroke
- .Plating plunger: Brass 3u" Au over 50u" Ni.
- .Plating barrel: Brass 3u" Au over 50u" Ni.
- .Plating spring: SUS 1u" Au

2.Inspection(working stroke)
- .Rated current & voltage: DC12V; 2A Max.
- .Life test: 100,000 cycles
- .Contact resistance: 50 milliohm Max.

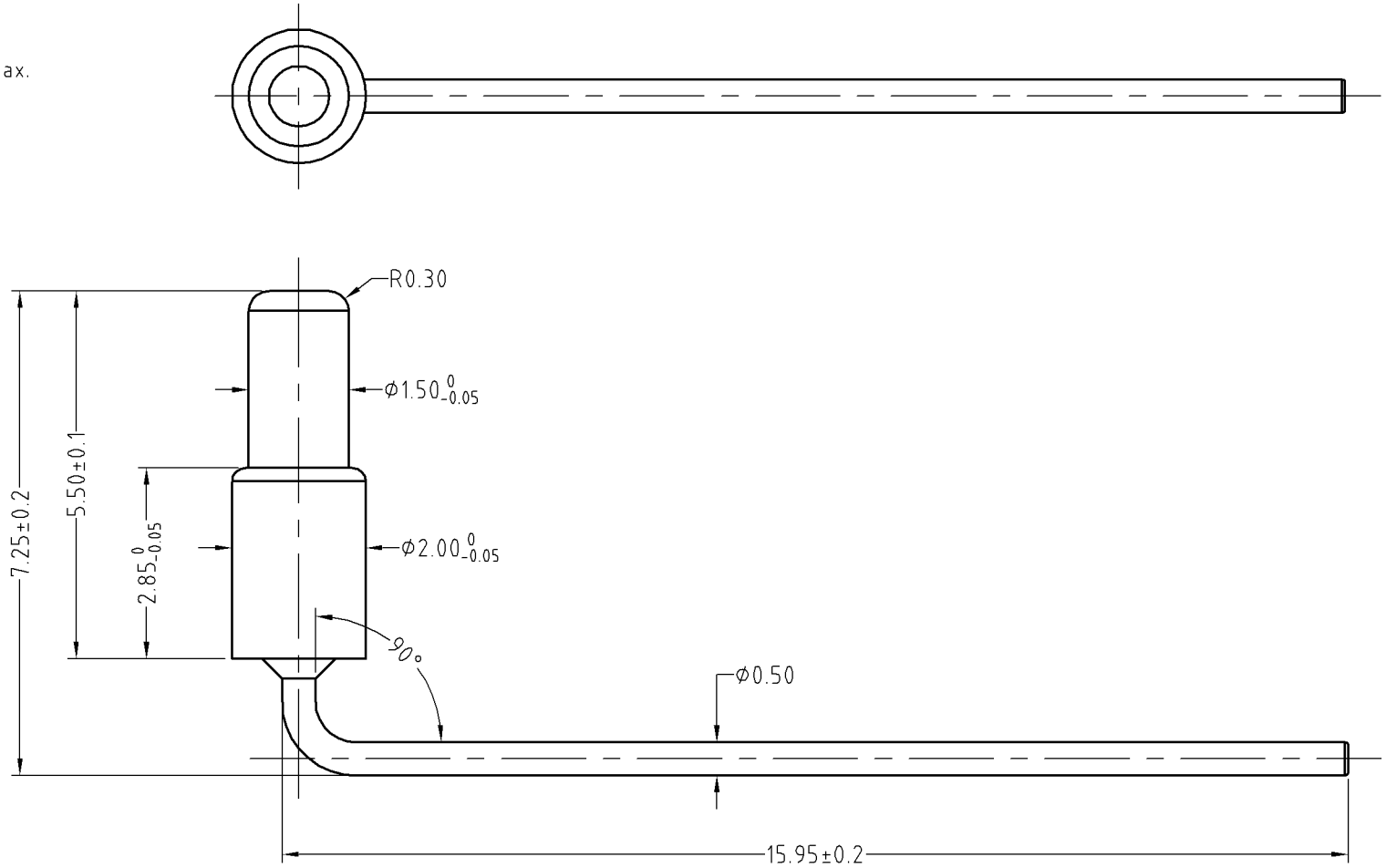

						SCALE	10:1	UNIT:mm	THIS DOCUMENT IS THE SOLE PROPERTY OF CFE CORPORATION CO.,LTD., AND SHOULD NOT BE USED IN WHOLE OR IN PART WITHOUT PRIOR WRITTEN PERMISSION.		
						ANGEL	±1°	A4			
						0.000	±0.02		SHEET: 1 of 1		
						0.00	±0.05	DRAW			PART NO. BP10111
	D0	2013.05.30	NEW			0.0	±0.10	CHECK			FILE NAME BP10111
ECN(DCN) NO.	REV	DATE	DESCRIPTION	CHANGE	APPRO	GENERAL TOLERANCE UNLESS OTHERWISE NOTED		APPRO			TITLE. Pogo pin connector